SA Series

- **High ripple, suitable to use in industrial power supplies for inverter circuitry, etc**

◆ SPECIFICATIONS

Item	Performance Characteristics	
Category Temperature Range	-40 ~ +85°C	-25 ~ +85°C
Working Voltage Range	160 ~ 250Vdc	350 ~ 450Vdc
Capacitance Range	2,700 ~ 68,000µF	1,000 ~ 18,000µF
Capacitance Tolerance	±20% (at 25°C and 120Hz)	

Dissipation Factor (tanδ) (at 25°C, 120Hz)

Rated Voltage (V)	160	200	250	350	400	450
tanδ(Max)	0.25	0.25	0.25	0.20	0.20	0.20

Leakage Current

I=0.01CV or 5000µA,whichever is smaller
I : Leakage current (µA) C : Rated capacitance (µF) V : Rated voltage (V)
Impress the rated voltage for 5 minutes

Endurance

The following specifications shall be satisfied when the capacitors are restored to 25°C after subjected to DC voltage with the rated ripple current is applied for 5,000 hours at 85°C.

Capacitance change	≦ ± 20% of the initial value
Dissipation factor(tanδ)	≦ 200% of the specified value
Leakage current	≦ Specified value

Shelf Life

The following requirements shall be satisfied when the capacitor are restored to 25°C after exposing them for 500 hours at 85°C without voltage applied.

Capacitance change	≦ ± 20% of the initial value
Dissipation factor(tanδ)	≦ 200% of the specified value
Leakage current	≦ Specified value

Others: Conforms to JIS-C-5101-4 (1998)

◆ DIMENSIONS (mm)

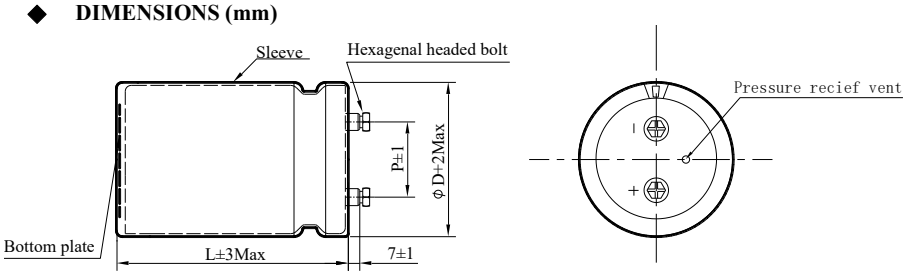

ΦD	51	64	76	90
P±1	22.4	28.0	31.5	31.5

◆ PART NUMBER SYSTEM (Example : 200V 27000µF)

S A 2 D 2 7 3 M L S 7 1 J 0 H 1 □ □ □ □

- Special Request
- Size code (71J0 : 71×190)
- Terminal code
- Capacitance tolerance code (M:±20%)
- Capacitance code (27000µF)
- Voltage code (200V)
- Series code (SA)

SA Series

◆ **STANDARD RATINGS**

WV (Vdc)	Cap (μF)	Case Size (mm) ΦD×L	Rated Ripple current (A rms/ 85°C, 120Hz)	Part Number
160 (2C)	3900	51×80	5.1	SA2C392MLS5180H1
	4700	51×80	5.6	SA2C472MLS5180H1
	5600	51×100	6.4	SA2C562MLS51A0H1
	6800	51×100	7.5	SA2C682MLS51A0H1
	6800	64×80	7.2	SA2C682MLS6480H1
	8200	51×120	8.4	SA2C822MLS51C0H1
	8200	64×100	8.1	SA2C822MLS64A0H1
	10000	51×120	11.1	SA2C103MLS51C0H1
	10000	64×100	9.8	SA2C103MLS64A0H1
	12000	64×100	10.8	SA2C123MLS64A0H1
	15000	64×120	12.7	SA2C153MLS64C0H1
	18000	64×150	14	SA2C183MLS64F0H1
	18000	76×100	13.6	SA2C183MLS76A0H1
	22000	64×150	17	SA2C223MLS64F0H1
	22000	76×120	16.6	SA2C223MLS76C0H1
	27000	76×150	18.1	SA2C273MLS76F0H1
	27000	90×120	17.6	SA2C273MLS90C0H1
	33000	76×150	19.4	SA2C333MLS76F0H1
	33000	90×120	18.9	SA2C333MLS90C0H1
	39000	76×190	20.8	SA2C393MLS76J0H1
	39000	90×150	20.3	SA2C393MLS90F0H1
	47000	76×220	22.2	SA2C473MLS76M0H1
	47000	90×170	21.7	SA2C473MLS90H0H1
	68000	90×230	22.3	SA2C683MLS90N0H1
200 (2D)	3300	51×80	4.5	SA2D332MLS5180H1
	3900	51×80	5.3	SA2D392MLS5180H1
	4700	51×100	7.1	SA2D472MLS51A0H1
	4700	64×80	6.8	SA2D472MLS6480H1
	5600	51×120	8.2	SA2D562MLS51C0H1
	5600	64×80	7.9	SA2D562MLS6480H1
	6800	51×120	9.2	SA2D682MLS51C0H1
	6800	64×100	8.9	SA2D682MLS64A0H1
	8200	64×100	10	SA2D822MLS64A0H1
	10000	64×120	11	SA2D103MLS64C0H1
	12000	64×140	11.5	SA2D123MLS64E0H1
	12000	76×100	11.1	SA2D123MLS76A0H1
	15000	64×160	12.8	SA2D153MLS64G0H1
	15000	76×120	12.4	SA2D153MLS76C0H1
	18000	76×140	13.5	SA2D183MLS76E0H1
	18000	90×110	13	SA2D183MLS90B0H1
	22000	76×160	15.6	SA2D223MLS76G0H1
	22000	90×130	15.1	SA2D223MLS90D0H1
	27000	76×190	17.6	SA2D273MLS76J0H1
	27000	90×150	17.1	SA2D273MLS90F0H1
	33000	76×220	18.8	SA2D333MLS76M0H1
	33000	90×170	18.3	SA2D333MLS90H0H1
	39000	90×200	19.6	SA2D393MLS90K0H1
250 (2E)	2700	51×80	4.2	SA2E272MLS5180H1
	3300	51×100	5	SA2E332MLS51A0H1
	3900	51×120	5.9	SA2E392MLS51C0H1
	3900	64×80	5.6	SA2E392MLS6480H1
	4700	51×120	6.9	SA2E472MLS51C0H1
	4700	64×100	6.6	SA2E472MLS64A0H1
	5600	64×100	7.8	SA2E562MLS64A0H1
	6800	64×120	8.7	SA2E682MLS64C0H1
	8200	64×120	10.1	SA2E822MLS64C0H1
	8200	76×100	9.7	SA2E822MLS76A0H1
	10000	64×150	11.1	SA2E103MLS64F0H1

WV (Vdc)	Cap (μF)	Case Size (mm) ΦD×L	Rated Ripple current (A rms/ 85°C, 120Hz)	Part Number
250 (2E)	10000	76×110	11.7	SA2E103MLS76B0H1
	12000	64×170	13	SA2E123MLS64H0H1
	12000	76×130	12.6	SA2E123MLS76D0H1
	15000	76×150	14.9	SA2E153MLS76F0H1
	15000	90×120	14.4	SA2E153MLS90C0H1
	18000	76×170	16.4	SA2E183MLS76H0H1
	18000	90×130	15.9	SA2E183MLS90D0H1
	22000	76×200	17.9	SA2E223MLS76K0H1
	22000	90×160	17.4	SA2E223MLS90G0H1
	27000	90×180	19.3	SA2E273MLS90I0H1
	33000	90×220	21.2	SA2E333MLS90M0H1
350 (2V)	1200	51×80	5.5	SA2V122MLS5180H1
	1500	51×80	6.1	SA2V152MLS5180H1
	1800	51×100	7.4	SA2V182MLS51A0H1
	2200	51×100	7.9	SA2V222MLS51A0H1
	2200	64×80	7.6	SA2V222MLS6480H1
	2700	51×120	9.8	SA2V272MLS51C0H1
	2700	64×100	9.5	SA2V272MLS64A0H1
	3300	51×120	10.8	SA2V332MLS51C0H1
	3300	64×110	10.5	SA2V332MLS64B0H1
	3900	64×120	12.3	SA2V392MLS64C0H1
	3900	76×100	11.9	SA2V392MLS76A0H1
	4700	64×130	14.2	SA2V472MLS64D0H1
	4700	76×100	13.8	SA2V472MLS76A0H1
	5600	64×150	15.9	SA2V562MLS64F0H1
	5600	76×120	15.5	SA2V562MLS76C0H1
	5600	90×100	15	SA2V562MLS90A0H1
	6800	76×150	18	SA2V682MLS76F0H1
	6800	90×100	17.5	SA2V682MLS90A0H1
	8200	76×150	21	SA2V822MLS76F0H1
	8200	90×120	20.5	SA2V822MLS90C0H1
	10000	90×150	25.3	SA2V103MLS90F0H1
	12000	90×170	28.4	SA2V123MLS90H0H1
	15000	90×190	34.6	SA2V153MLS90J0H1
	18000	90×230	39.7	SA2V183MLS90N0H1
400 (2G)	1000	51×80	5	SA2G102MLS5180H1
	1200	51×80	5.5	SA2G122MLS5180H1
	1500	51×100	6.5	SA2G152MLS51A0H1
	1500	64×80	6.2	SA2G152MLS6480H1
	1800	51×100	7.1	SA2G182MLS51A0H1
	1800	64×80	6.8	SA2G182MLS6480H1
	2200	51×120	8.8	SA2G222MLS51C0H1
	2200	64×100	8.5	SA2G222MLS64A0H1
	2700	64×100	9.9	SA2G272MLS64A0H1
	3300	64×120	11.3	SA2G332MLS64C0H1
	3300	76×100	10.9	SA2G332MLS76A0H1
	3900	64×130	12.9	SA2G392MLS64D0H1
	3900	76×100	12.5	SA2G392MLS76A0H1
	4700	64×150	14.5	SA2G472MLS64F0H1
	4700	76×120	14.1	SA2G472MLS76C0H1
	4700	90×100	13.6	SA2G472MLS90A0H1
	5600	76×130	16.3	SA2G562MLS76D0H1
	5600	90×100	15.8	SA2G562MLS90A0H1
	6800	76×150	19.2	SA2G682MLS76F0H1
	6800	90×120	18.7	SA2G682MLS90C0H1
	8200	76×170	24	SA2G822MLS76H0H1
	8200	90×150	23.5	SA2G822MLS90F0H1
	10000	76×200	26.4	SA2G103MLS76K0H1

SA Series

◆ STANDARD RATINGS

WV (Vdc)	Cap (μF)	Case Size (mm) ΦD×L	Rated Ripple current (A rms/ 85°C, 120Hz)	Part Number
400 (2G)	10000	90×170	25.9	SA2G103MLS90H0H1
	12000	76×230	31.5	SA2G123MLS76N0H1
	12000	90×190	31	SA2G123MLS90J0H1
	15000	90×230	36.5	SA2G153MLS90N0H1
450 (2W)	1000	51×80	5	SA2W102MLS5180H1
	1200	51×100	5.5	SA2W122MLS51A0H1
	1200	64×80	5.2	SA2W122MLS6480H1
	1500	51×120	6.9	SA2W152MLS51C0H1
	1500	64×100	6.6	SA2W152MLS64A0H1
	1800	51×120	8.1	SA2W182MLS51C0H1
	1800	64×100	7.7	SA2W182MLS64A0H1
	2200	64×100	9	SA2W222MLS64A0H1
	2700	64×120	10.3	SA2W272MLS64C0H1
	2700	76×100	9.9	SA2W272MLS76A0H1
	3300	64×130	11.6	SA2W332MLS64D0H1

WV (Vdc)	Cap (μF)	Case Size (mm) ΦD×L	Rated Ripple current (A rms/ 85°C, 120Hz)	Part Number
450 (2W)	3300	76×100	11.2	SA2W332MLS76A0H1
	3900	64×150	13.4	SA2W392MLS64F0H1
	3900	76×120	13	SA2W392MLS76C0H1
	3900	90×100	12.5	SA2W392MLS90A0H1
	4700	76×130	15	SA2W472MLS76D0H1
	4700	90×100	14.5	SA2W472MLS90A0H1
	5600	76×150	17.5	SA2W562MLS76F0H1
	5600	90×120	17	SA2W562MLS90C0H1
	6800	76×170	21.9	SA2W682MLS76H0H1
	6800	90×150	21.4	SA2W682MLS90F0H1
	8200	76×200	24	SA2W822MLS76K0H1
	8200	90×170	23.5	SA2W822MLS90H0H1
	10000	76×230	28.8	SA2W103MLS76N0H1
	10000	90×190	28.3	SA2W103MLS90J0H1
	12000	90×230	33	SA2W123MLS90N0H1

◆ RIPPLE CURRENT MULTIPLIERS

Frequency Multipliers

Vdc	Frequency (Hz)				
	60	120	360	1K	10K
160 ~ 450	0.82	1.00	1.20	1.35	1.40

◆ DIMENSIONS (Screw-Mount) [mm]

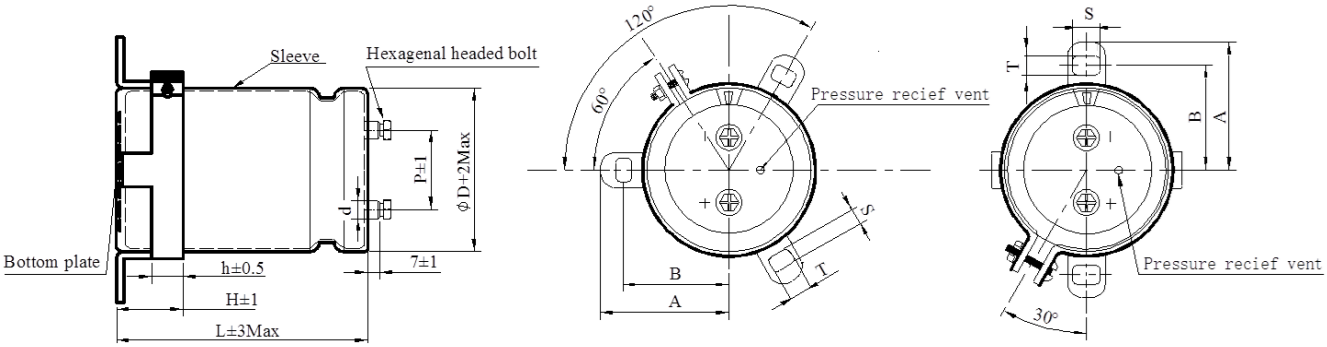

◆ Tmerminal pitch and Nominal dia. of bolt

Terminal Code	ΦD	P±1	Nominal dia. of bolt	d±0.5
LS	51	22.4	M5	10
	64	28.0	M5	10
	76	31.5	M5	10
	90	31.5	M5	10
LA	64	28.0	M5	13
	76	31.5	M5	13
	90	31.5	M5	13
LB	76	31.5	M6	17
	90	31.5	M6	17

◆ Dimensions of mounting bracket

Leg shape	ΦD	A±2	B±1	T±0.5	S±0.5	H±1	h±0.5
2 – Leg (Code:K1)	51	40.0	34.0	7.0	5.0	30	24
	64	46.5	40.5	7.0	5.0	30	24
	76	53.0	46.8	7.0	5.0	30	24
	90	60.3	54.0	7.0	5.0	35	20
3 – Leg (Code:K2)	54	36.5	31.8	7.0	5.0	30	24
	64	43.6	38.1	7.0	5.0	30	24
	76	50.2	44.5	7.0	5.0	30	24
	90	56.5	50.8	7.0	5.0	30	24